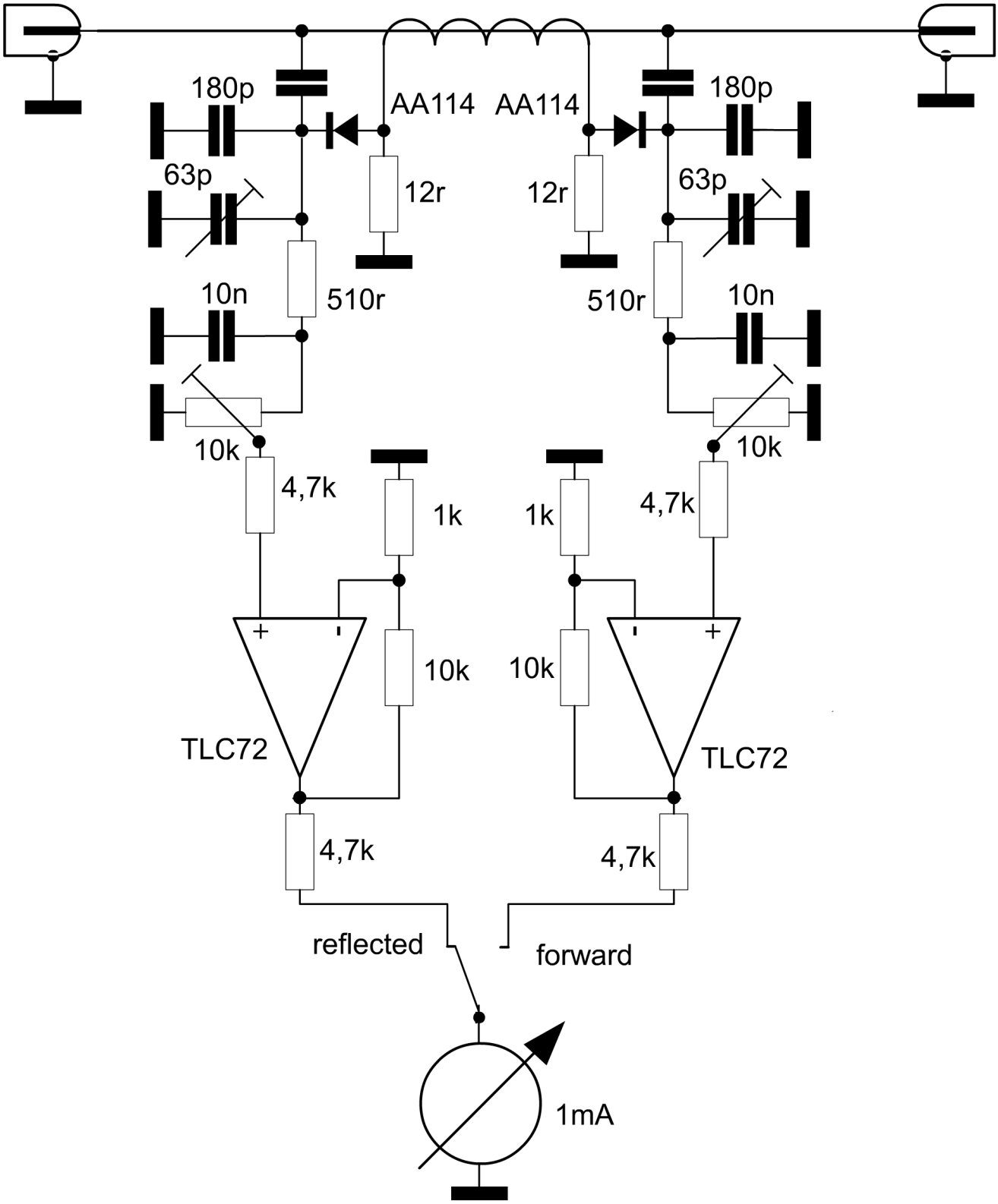
180p
AA114
AA114
180p
63p
12r
12r
63p
10n
510r
510r
10n
10k
10k
4,7k
1k
1k
4,7k
10k
10k
TLC72
TLC72
4,7k
4,7k
reflected
forward
1mA