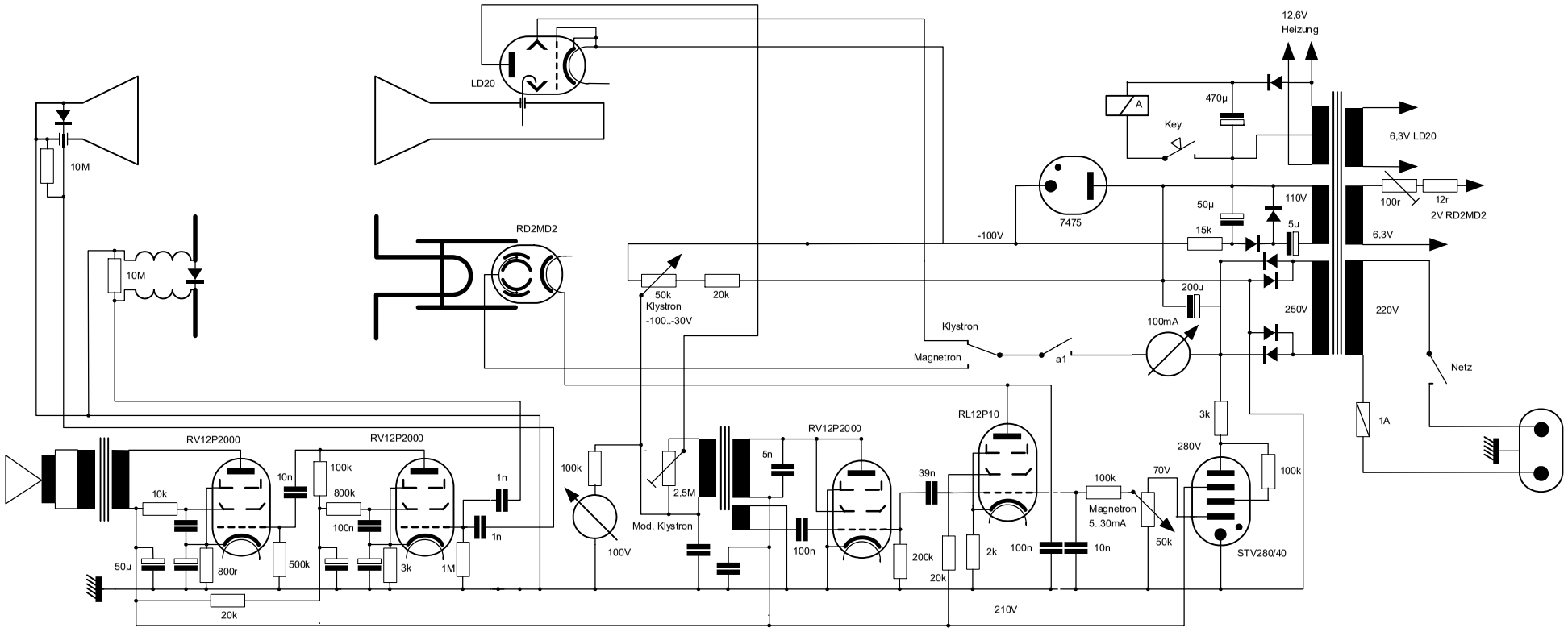
LD20
10M
10M
RD2MD2
50k
Klystron
-100..-30V
20k
-100V
7475
A
Key
470µ
12,6V
Heizung
6,3V LD20
100r
12r
2V RD2MD2
6,3V
50µ
110V
5µ
15k
200µ
250V
220V
100mA
Klystron
Magnetron
a1
Netz
1A
3k
280V
100k
STV280/40
RV12P2000
RV12P2000
10k
10n
100k
800k
100n
1n
1n
50µ
800r
500k
3k
1M
20k
100k
100V
2,5M
Mod. Klystron
5n
100n
RV12P2000
200k
39n
20k
2k
RL12P10
100n
10n
210V
100k
Magnetron
5..30mA
70V
50k